MALE END VIEW	FEMALE END VIEW

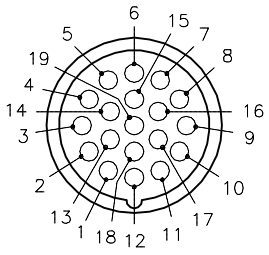

1 = VIOLET
2 = RED
3 = GREY
4 = RED/BLUE
5 = GREEN
6 = BLUE
7 = GREY/PINK
8 = WHITE/GREEN
9 = WHITE/YELLOW
10 = WHITE/GREY
11 = BLACK
12 = GREEN/YELLOW
13 = YELLOW/BROWN
14 = BROWN/GREEN
15 = WHITE
16 = YELLOW
17 = PINK
18 = GREY/BROWN
19 = BROWN

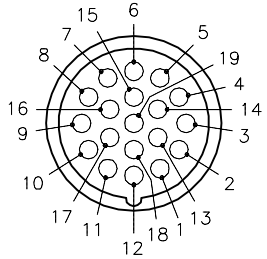

M23 connector

M23 connector

SPECIFICATIONS

CONTACT CARRIER MATERIAL	NYLON or PBT
MOLDED HEAD MATERIAL/COLOR	TPU/BLACK
CONTACT MATERIAL/PLATING	BRASS/GOLD
COUPLING NUT MATERIAL/PLATING	BRASS/NICKEL
RATED CURRENT [A]	9.0 A (PINS 6,12,19), 2.0 A (ALL OTHERS)
RATED VOLTAGE [V]	150 V
OUTER JACKET MATERIAL/COLOR	TPU/YELLOW
CONDUCTOR INSULATION MATERIAL	PVC
NUMBER OF CONDUCTORS [AWG]	3x18 AWG, 16x22 AWG
DRAIN/SHIELD	20 AWG DRAIN/ALUMINIZED FOIL SHIELD
TEMPERATURE RANGE	−40°C to +90°C (−40°F to +194°F)
PROTECTION CLASS	IEC IP67

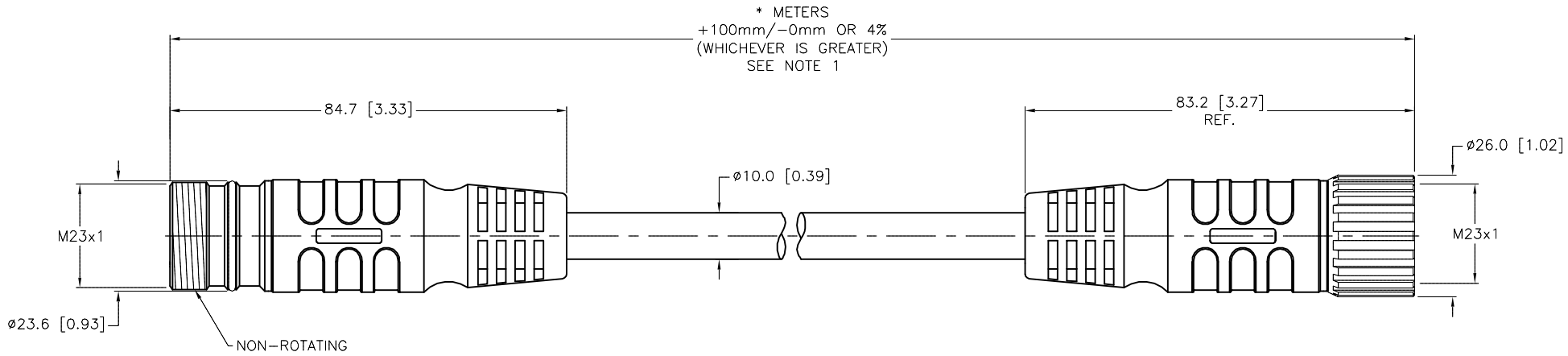

SOURCE DRAWING - FOR REFERENCE ONLY

NOTES:

1. "*" INDICATES CABLE LENGTH IN METERS. CONTACT TURCK TO ORDER SPECIFIC LENGTHS.

2. "/S90" DESIGNATES POLYURETHANE (TPU) CABLE

REV	DESCRIPTION	BY	DATE	ECO NO.
E	UPDATE CABLE DIAMETER & TEMP SPECIFICATION	KMY	03/06/14	44461

RELATED DOCUMENTS
1.
2.
3.
4.

3RD ANGLE PROJECTION

THIS DRAWING IS CONFIDENTIAL AND THE PROPERTY OF TURCK INC. USE OF THIS DOCUMENT WITHOUT WRITTEN PERMISSION IS PROHIBITED.

TURCK INC
High Technology Sensors and Automation Controls
3000 CAMPUS DRIVE
MINNEAPOLIS, MN 55441
1-800-544-7769
(763) 553-7300
(763) 553-0708 fax
turck.com

MATERIAL: SEE SPECIFICATIONS

FINISH: SEE SPECIFICATIONS

ALL DIMENSIONS DISPLAYED ON THIS DRAWING ARE FOR REFERENCE ONLY

CONTACT TURCK FOR MORE INFORMATION

DRFT: RDS | DATE: 01/13/09
APVD: | SCALE: 1=1.3

UNIT OF MEASUREMENT
MILLIMETER [INCH]
DO NOT SCALE THIS DRAWING

DESCRIPTION: CSSM CKM 19-19-*/S90

IDENTIFICATION NO.:

REV: E

FILE: 777001607 | SHEET 1 OF 1

Approved 03/07/2014, work order #53503 by L.H.